3-230

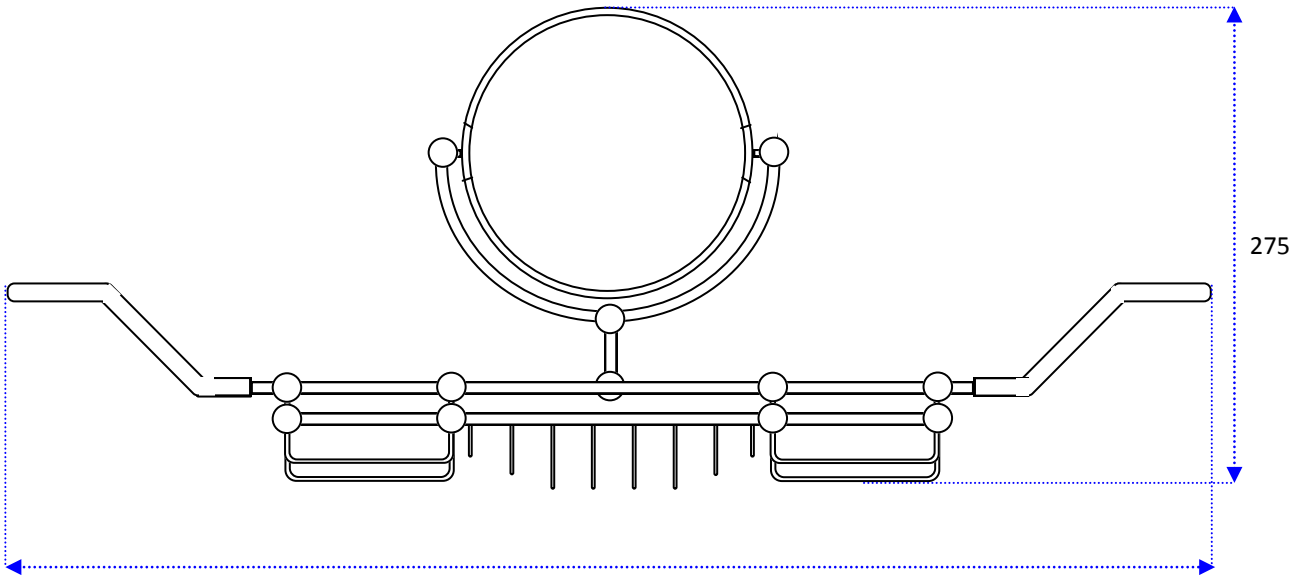

THE STERLINGHAM COMPANY LIMITED