2-130

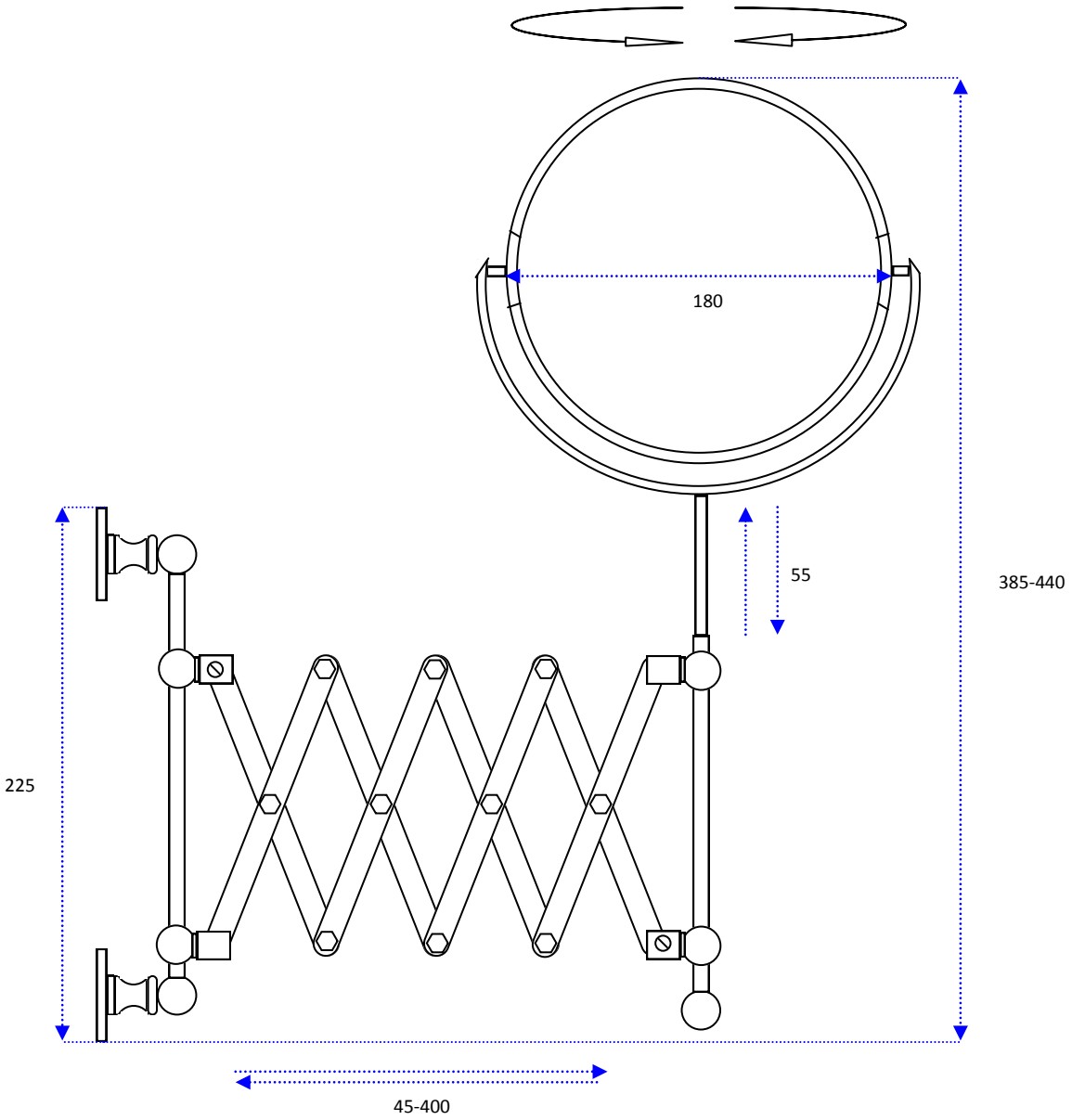

THE STERLINGHAM COMPANY LIMITED