FRAMELESS OVAL MIRROR

2-118

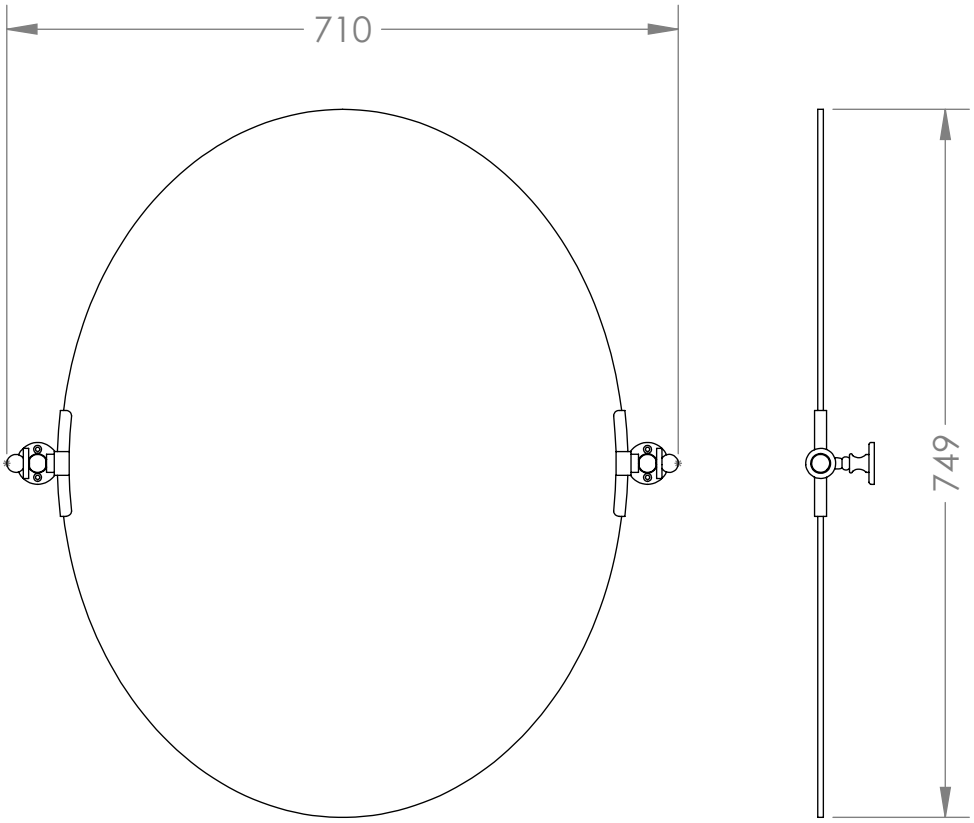

SCALE: 1:8	APPROX WEIGHT 5.87KG	THE STERLINGHAM CO. LTD	MANUFACTURED FROM BRASS TUBE