1-035

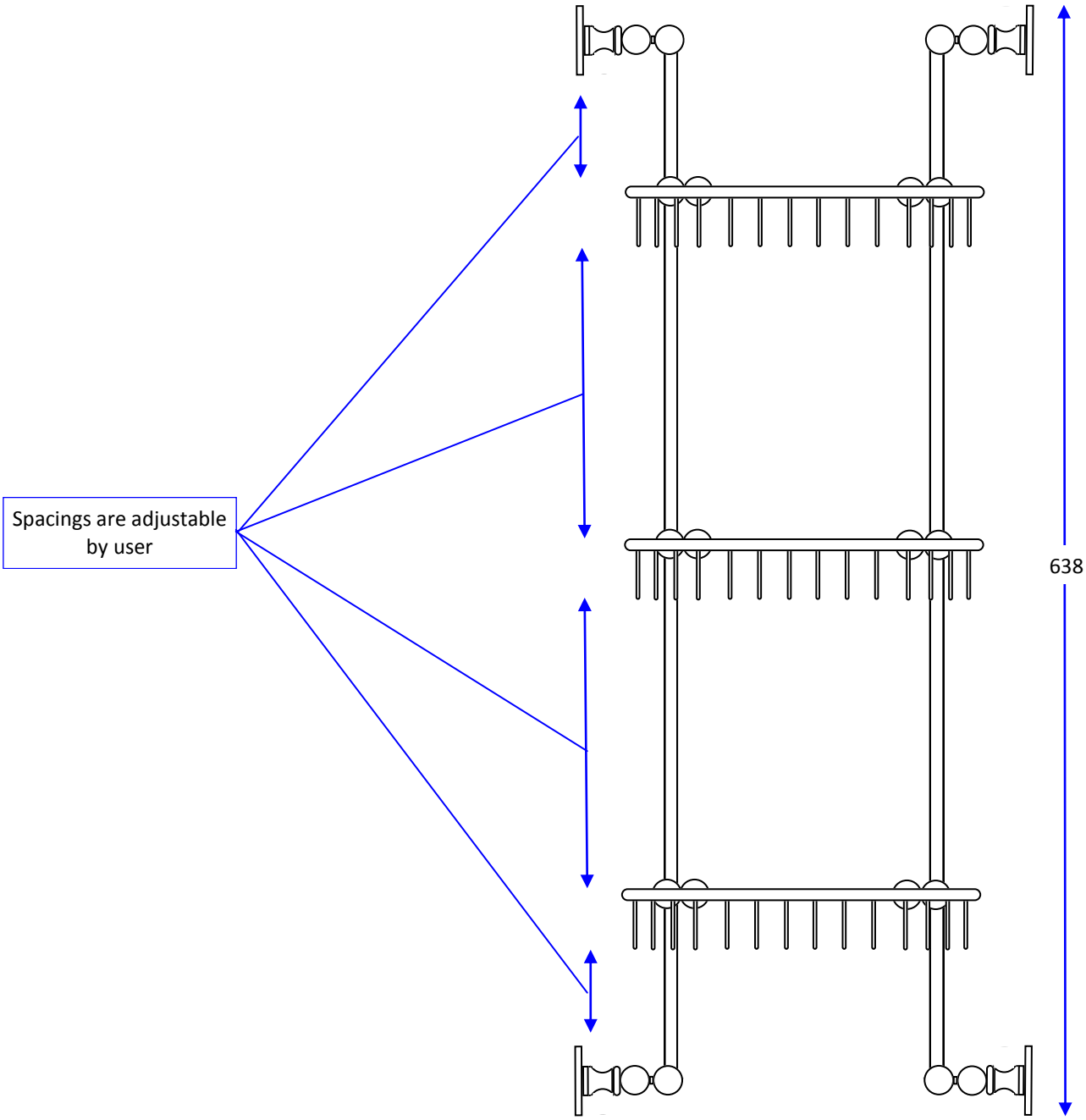

1-035

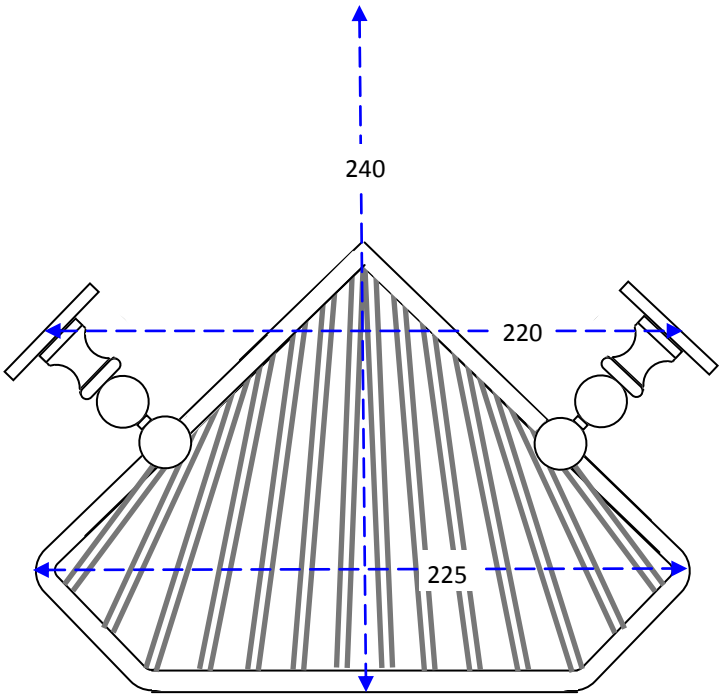

THE STERLINGHAM COMPANY LIMITED